# CP-134EL-A-I

## *4-port RS-422/485 PCI Express board with 4 kV surge and 2 kV electrical isolation*

- PCI Express x1 compliant
- Serial communication speed up to 921.6 kbps
- 128-byte FIFO and on-chip S/W flow control
- Variety of connection cables and boxes available for RS-232/422/485
- Drivers provided for the latest versions of Windows, Linux, and Unix
- Easy maintenance with on-board LED display and management software

PComm Lite

## Overview

The CP-134EL-A-I is a smart PCI Express multiport serial board designed for POS and ATM applications, and for use by industrial automation system manufacturers and system integrators. The CP-134EL-A-I is compatible with all popular operating systems, and each of its 8 serial ports supports data rates of up to 921.6 kbps and provides full modem control signals, ensuring compatibility with a wide range of serial peripherals. In addition, the CP-134EL-A-I works with PCI Express x1, allowing the board to be installed in any PCI Express slot.

## Intelligent RS-485 for Easy Installation and Troubleshooting (Patent Pending)

Setting up an RS-485 network is relatively straightforward. The challenge comes when the power is turned on and the devices connected to the network start transmitting and receiving data. In most cases, engineers will need to further tune the system by configuring pull high/low resistors and terminators at strategic points along the network. Moxa's new Intelligent RS-485 technology supports two essential features to make it easy: (1) One-Click Installation automatically analyzes the network topology and then adjusts terminators and pull high/low resistors. (2) One-Click Troubleshooting tells you what to change to make a deficient network viable.

## Specifications

### Hardware
**Comm. Controller:** 16C550C compatible
**Bus:** PCI Express x1
**Connector:** DB44 female

### Serial Interface
**Number of Ports:** 4
**Serial Standards:** RS-422/485
**Max. No. of Boards per PC:** 4

### Serial Line Protection
**Surge Protection:** 4 kV
**Electrical Isolation:** 2 kV

### Performance
**Baudrate:** 50 bps to 921.6 kbps

### Serial Communication Parameters
**Data Bits:** 5, 6, 7, 8
**Stop Bits:** 1, 1.5, 2
**Parity:** None, Even, Odd, Space, Mark
**Flow Control:** RTS/CTS, XON/XOFF

### Serial Signals
**RS-422:** TxD+(B), TxD-(A), RxD+(B), RxD-(A), GND
**RS-485-4w:** TxD+(B), TxD-(A), RxD+(B), RxD-(A), GND
**RS-485-2w:** Data+(B), Data-(A), GND

### Physical Characteristics
**Dimensions:** 67.21 x 103 mm (2.65 x 4.06 in)

### Driver Support
**Windows:** Windows 2000/XP/2003/Vista/2008/7/8/8.1/10 (x86/x64), Windows 2008 R2/2012/2012 R2 (x64)
**Linux:** Linux 2.4.x, 2.6.x, 3.x
**Unix-like Systems:** QNX 6, SCO OpenServer, UnixWare 7, Solaris 10 (x86/x64)
Note: Please refer to Moxa's website for the latest driver support information.

### Environmental Limits
**Operating Temperature:** 0 to 55°C (32 to 131°F)
**Storage Temperature:** -20 to 85°C (-4 to 185°F)
**Ambient Relative Humidity:** 5 to 95% (non-condensing)

## Standards and Certifications

**EMC:** EN 55022/24
**EMI:** CISPR 22, FCC Part 15B Class B
**EMS:**
IEC 61000-4-2 ESD: Contact: 4 kV; Air: 8 kV
IEC 61000-4-3 RS: 80 MHz to 1 GHz: 3 V/m
IEC 61000-4-4 EFT: Power: 1 kV; Signal: 0.5 kV
IEC 61000-4-5 Surge: Power: 2 kV; Signal: 4 kV
IEC 61000-4-6 CS: 150 kHz to 80 MHz: 3 V/m; Signal: 3 V/m
IEC 61000-4-8 PFMF
IEC 61000-4-11

## MTBF (mean time between failures)

**Time:** 433,077 hrs
**Standard:** Telcordia (Bellcore) TR/SR

## Power Requirements

**Input Current:** 3,414 mA @ 3.3 VDC

## Warranty

**Warranty Period:** 5 years
**Details:** See www.moxa.com/warranty

## Dimensions

Unit: mm (inch)

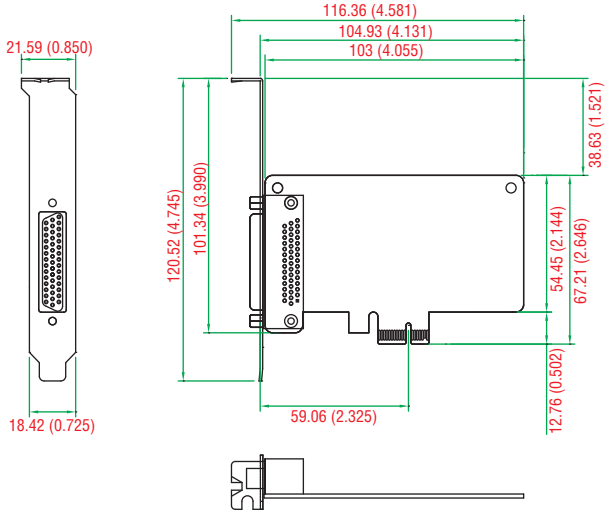


# Ordering Information

## Available Models

**CP-134EL-A-I:** 4-port RS-422/485 low profile PCI Express x1 serial board w/ surge protection and electrical isolation
**CP-134EL-A-I-DB9M:** 4-port RS-422/485 low profile PCI Express x1 serial board w/ surge protection and electrical isolation, CBL-M44M9x4-50 cable included
**CP-134EL-A-I-DB25M:** 4-port RS-422/485 low profile PCI Express x1 serial board w/ surge protection and electrical isolation, CBL-M44M25x4-50 cable included

## Connection Options (can be purchased separately)

**Low Profile Bracket:** Bracket for DB44 connector (1490000001000)
**CBL-M44M9x4-50:** M44 to 4 x DB9-M cable, 50 cm
**CBL-M44M25x4-50:** M44 to 4 x DB25-M cable, 50 cm

## Package Checklist

- 1 CP-134EL-A-I board
- Low profile bracket
- 1 connection cable (optional)
- Documentation and software CD
- Quick installation guide (printed)
- Warranty card

### CBL-M44M9x4-50

DB44 male to DB9 male x 4
(50 cm cable)

| PIN | RS-232 | RS-422 | RS-485-4w | RS-485-2w |
|---|---|---|---|---|
| 1 | DCD | TxD–(A) | TxD–(A) | – |
| 2 | RxD | TxD+(B) | TxD+(B) | – |
| 3 | TxD | RxD+(B) | RxD+(B) | Data+(B) |
| 4 | DTR | RxD–(A) | RxD–(A) | Data–(A) |
| 5 | GND | GND | GND | GND |
| 6 | DSR | – | – | – |
| 7 | RTS | – | – | – |
| 8 | CTS | – | – | – |
| 9 | – | – | – | – |

**DB9 male**

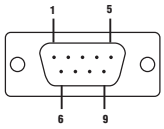


### CBL-M44M25x4-50

DB44 male to DB25 male x 4
(50 cm cable)

| PIN | RS-232 | RS-422 | RS-485-4w | RS-485-2w |
|---|---|---|---|---|
| 2 | TxD | RxD+(B) | RxD+(B) | Data+(B) |
| 3 | RxD | TxD+(B) | TxD+(B) | – |
| 4 | RTS | – | – | – |
| 5 | CTS | – | – | – |
| 6 | DSR | – | – | – |
| 7 | GND | GND | GND | GND |
| 8 | DCD | TxD–(A) | TxD–(A) | – |
| 20 | DTR | RxD–(A) | RxD–(A) | Data–(A) |
| 22 | – | – | – | – |
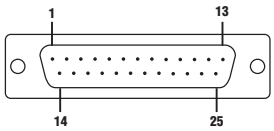
**DB25 male**