GOT712-837

12.1" XGA TFT LCD Railway Fanless Touchscreen Panel PC with Intel® Atom™ Processor E3845 1.91 GHz (-40°C to +70°C)

Features

- Sunlight readable 12.1" XGA TFT LCD with a high brightness of 800 nits
- Fanless with Intel® Atom™ processor E3845 1.91 GHz
- All lockable connectors design
- Auto-dimming for different environments
- -40°C to +70°C wide temperature range
- EN 50155, EN 45545-2 certified

TAIWAN EXCELLENCE 2017

▲ Side view

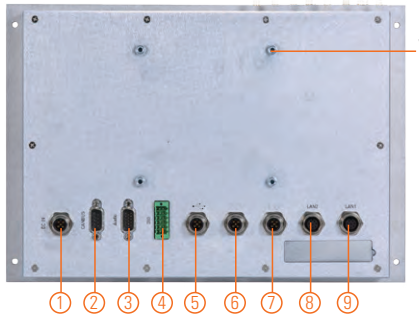

1. DC power input
2. CANbus with isolation 1.5kV
3. Audio (line-out, line-in, mic-in & speaker-out)
4. DIO (6-in/2-out with isolation 1.5kV)
5. 2 x USB 2.0
6. 1 x RS-232/422/485 with isolation 1.5kV
7. 1 x RS-232/422/485 with isolation 1.5kV
8. 1 x GbE with isolation 1.5kV
9. 1 x GbE with isolation 1.5kV

EN50155 | M12 Connector | Fanless | Low Power | Ext. Temp | DDR3

Introduction

The EN 50155 railway touchscreen panel PC, GOT712-837, is equipped with a 12.1-inch XGA TFT LCD with high brightness LED backlight (800 nits), which allows a train operator to easily read any operational status messages, even under direct sunlight. Design for ease of use and maintenance, this all-in-one 12.1" railway touch panel PC also has an alternative keypad control on the front bezel for easy access and cleaning purposes. This feature-rich panel PC has an IP65-rated front bezel, M12 connectors and EN 50155 compliance.

Wide Temperature (-40°C to +70°C)

The Intel® Atom™-based railway panel PC, GOT712-837, applies unique extended temperature technology with wide temperature range support as well as fanless operation. It also has a high brightness display and compact design for transport heavy-duty environment.

Designed for Railway Application

The Axiomtek GOT712-837 is particularly suitable for demanding HMI applications in the railway sector, including tasks like monitoring and controlling speed, temperature, and security, or for fleet management. To ensure the reliable operation in a variety of different locations, the 12.1-inch railway panel PC supports various mounting options: panel mount, wall mount, VESA arm and desktop stand. Moreover, it is also ready for Windows® 7, 8.1 and 10.

Specifications

Front Bezel	IP65, NEMA 4 rugged protection, aluminum front bezel	
LCD Panel	Display Type	12.1" TFT LCD
	Brightness (cd/m^2)	800 nits
	Resolution	1024 x 768
	Viewing Angle (H/V)	160°/160°
Main System	CPU	Intel® Atom™ processor E3845 1.91 GHz (Bay Trail)
	Chipset	SoC integrated
	System Memory	DDR3 4GB
	BIOS	AMI with Axiomtek standard features, such as SmartView, Ethernet Boot ROM (RPL & PXE), customer CMOS backup
	Storage	16GB flash onboard 1 x mSATA
	Watchdog Timer	255 levels, 1 to 255 sec.
	Onboard Graphics	Integrated in Intel® GFX

* All specifications and photos are subject to change without notice. www.axiomtek.com © 2021 Axiomtek Co., Ltd. All rights reserved.

Specifications

I/O Connector	2 x Isolated M12 A-coded RS-232/422/485 (isolation level 1.5kV) 2 x Isolated M12 X-coded GbE (isolation level 1.5kV) 1 x M12 A-coded USB 2.0 (2 port signal) 1 x M12 A-coded DC-in 1 x DB15 audio line-in, line-out, mic-in and speaker-out 1 x Isolated terminal block DIO (6-in/2-out, isolation level 1.5kV) 1 x Isolated DB9 CANbus (isolation level 1.5kV)
Expansion Interface	2 x PCI Express Mini Card slot
Flat Panel	Alternative 5-wire resistive touchscreen or keyboard
Power Supply	Typical 24 VDC, working range 16.8 - 30 VDC Typical 110 VDC, working range 77 to 137.5 VDC Typical 24 to 110 VDC, working range 16.8 to 137.5 VDC, S3 20ms hold up time
Power Consumption	35W
Dimensions	330 mm (13") (W) x 64.4 mm (2.53") (D) x 245 mm (9.65") (H)
Packing Dimensions	510 mm (20.08") (W) x 186 mm (7.32") (D) x 532 mm (20.94") (H)
Weight (net/gross)	5.54 kg (12.21 lb)/3 kg (6.61 lb)
Operating Temperature	-40°C to +70°C (-13°F to +158°F)
Relative Humidity	10% to 95% @ +40°C, non-condensing
Certifications	CE, EN 50155, EN 45545-2

* W.T.: Wide Temperature. All W.T. supported products have to be sorted by Axiomtek.

Packing List

1 x GOT712-837 unit
1 x Power cable
1 x Phoenix connector

▲ Touch without keypad version

Ordering Information

24 VDC Power Input	
GOT712-837-R-E3845-24VDC (P/N: E22B712100)	12" XGA railway fanless touchscreen panel PC with Intel® Atom™ E3845, sunlight readable LCD (800 nits), 5-wire resistive touchscreen and 24 VDC power input
110 VDC Power Input	
GOT712-837-R-E3845-110VDC (P/N: E22B712101)	12" XGA railway fanless touch panel computer with Intel® Atom™ E3845, sunlight readable LCD (800 nits), 5-wire resistive touchscreen and 110 VDC power input
24 to 110 VDC Power Input	
GOT712-837-R-E3845-24-110VDC (P/N: E22B712102)	12" XGA railway fanless touch panel computer with Intel® Atom™ E3845, sunlight readable LCD (800 nits), 5-wire resistive touchscreen and 24 to 110 VDC power input, S3 20ms power interruption protection

*Specifications and certifications may vary based on different requirements.

Optional Accessories

822B7100140E	GOT712 3G+GPS kit
8812B7100A0E	GOT712 Wi-Fi kit
594B8122820E	M12 A-coded USB cable
594B7102100E	RS-232 cable
594B7102700E	M12 X-coded LAN cable

Optional EOS Installation

WES 7
WE8S
Windows® 10 (IoT)

Optional OS Installation

Windows® 7
Windows® 8/8.1
Windows® 10

Dimensions

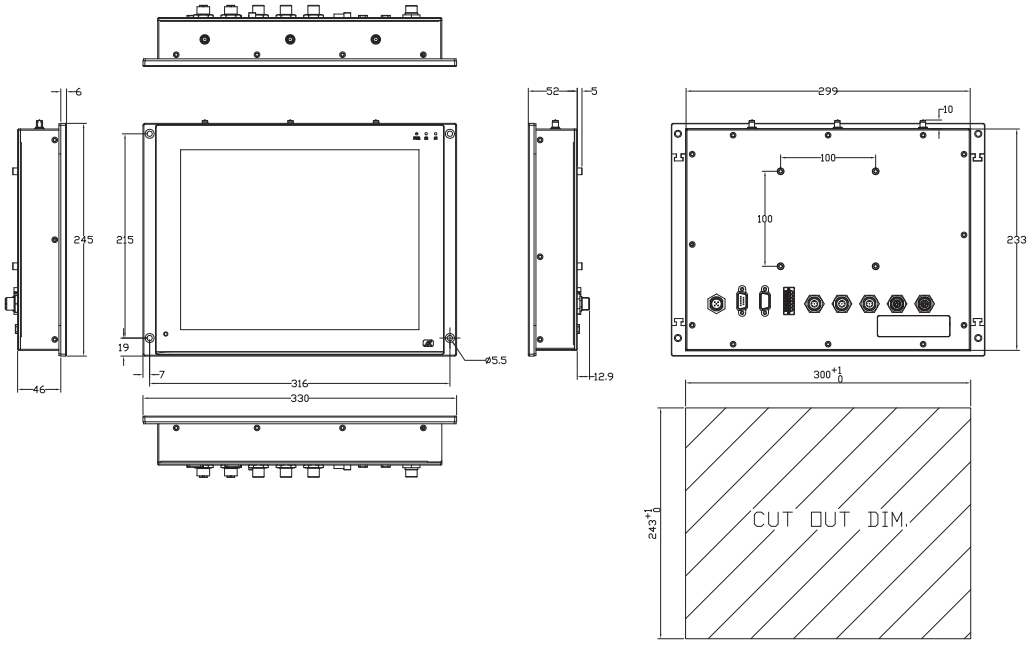

© 2021 Axiomtek Co., Ltd. All rights reserved.